Construction Phased Accessibility Review

Statement of Work for

Brinshore Development

Fernwood at Five Points

May 1, 2026

Clark Crowther
SVP - Asset MAnagement

LUMINA COMPLIANCE
1300 South Blvd Charlotte, NC 20203
Clark@LUMINACOMP.COM

704-572-0199

Table of Contents

PROJECT LOCATION **3**

REFERENCES: **3**

RESUMES: **3**

Greg Proctor: CEO / Founder 3

Clark Crowther: SVP of Operations 4

REPORT SAMPLES: **4**

PROJECT LIST: **4**

STATEMENT OF WORK **5**

1. Construction Document Services 5
2. Construction Phased Services 5

Lumina Compliance
1515 Mockingbird Lane | Charlotte, North Carolina 28207 | 704.343.5779

Project Location

Fernwood at Five Points will be located at 2225 College Street, Columbia, SC 29205. Will consist of 58 units.

References:

J&A, Inc. Jeremy Hudson President, 516A Cruise Street Corinth, MS 38834 662-287-6158, x146	The Michaels Organization Mary Keshishyan Regional Vice President P (916) 883-1120, ext 2202 mkeshishian@tmo.com	Community Management Corporation Mark Muncus Asset Manager/Regional support 1415 Old mill circle winston salem, NC 27103 Office: 336-231-8106 Email: mmuncus@cmc-nc.com

Resumes:

Greg Proctor: CEO / Founder

Greg Proctor has well more than 30 years of experience in the affordable housing industry and has owned and/or operated all types of affordable housing, including HUD, Tax Credit, and Rural Development. He has a degree in management from Appalachian State University and holds multiple affordable housing designations and certifications. Mr. Proctor is currently the Founder and CEO of Lumina Partners, LLC, an investor and developer of affordable housing.

Through his various compliance companies, he has worked with owners, managers, housing authorities, housing finance agencies, banks and financial institutions to assist them in keeping their portfolios in compliance with federal regulations and mandates surrounding the Low Income Housing Tax Credit, Section 8, Tax Exempt Bonds and Rural Development.

Greg's primary focus throughout his long career has been all aspects of affordable housing, most specifically on Section 8 of the Housing Act of 1937, section 42 of the Internal Revenue Code, the Americans with Disabilities Act, Section 504 of the Rehabilitation Act of 1973, and the Fair Housing Amendments Act.

Certifications: Specialist in Housing Credit Management (SHCM), Fair Housing Compliance (FHC), Certified Professional of Occupancy (CPO), LEED accredited, NAH-P Executive

Clark Crowther: SVP of Operations

Clark Crowther is the Senior Vice President of Asset Management at Lumina Compliance and oversees all of the company's asset management business. With more than 25 years of experience in affordable housing, Clark t1as extensive knowledge in the Low Income Housing Tax Credit (LIHTC), HUD, and Rural Development programs. He is a Certified Professional of Occupancy (CPO), a Specialist in Housing Credit Management (SHCM), and is Fair Housing Compliance (FHC) certified, with a focus on disability and physical accessibility.

Under his direction, Clark has overseen the production of well over a 1,000 ADA/504/Fair Housing Evaluation and Transition Plans, Comprehensive Needs Assessments (CNAs) and Project Capital Needs Assessments (PCNAs). He is also experienced in risk management, construction, and modular housing.

Clark is a graduate of Appalachian State University. In his free time, he enjoys spending time with his wife and three adult children. He is a volunteer with lnReach, the American Heart Association, and The Human Fund He also enjoys bike riding, skiing, home renovation, and traveling.

Certifications: Specialist in Housing Credit Management (SHCM), Fair Housing Compliance (FHC), Certified Professional of Occupancy (CPO), LEED accredited, NAH-P Executive

Report Samples:

See Attached or Hyperlink below: Please note that these are real properties however names, addresses and identifiers have been changed as best as possible due to our contractual agreement.

Project List:

The Lumina Compliance principals have conducted over 15,000 accessibility reviews on established properties, Acc-Rehabs and new construction. These are the most recent 10 properties from various companies.

Community Management Corporation (CMC)	Pine Terrace, 40 units, USDA RD, YES
Community Management Corporation (CMC)	River Hill, 50 units, USDA RD, YES
Idaho Friends Retirement Homes	Idaho Friends Retirement Homes, Senior, 19 units, USDA RD, Yes
J&A Inc	Batesville Associates, Family, 28 units USDA RD, YES
J&A Inc	Batesville Elderly, Senior, 24 units, USDA RD, YES
Solari Enterprises	Casa Imperial, Family, 48 units, USDA RD, LIHTC, YES
Solari Enterprises	Donner Trail Manor, Family, 44 units, USDA RD, LIHTC, YES
The Michaels Organization	Sunset Street, Family, 104 units, USDA RD, LIHTC, YES
PK Housing	Bristol Square, Family, 88 units, LIHTC, HUD
Nevada Rural Housing	Saddlebrook Apartments, 10 units, USDA RD,
Somerset Pacific	Hooper Springs, Family, 48 units, LIHTC, Market, Sec8, YES

Lumina Compliance
1515 Mockingbird Lane | Charlotte, North Carolina 28207 | 704.343.5779

Statement of Work

This Statement of Work represents the complete agreement and replaces any prior oral or written communications between the two parties regarding this subject.

Lumina Compliance has a background in the management and compliance of Low Income Housing Tax Credit (Section 42), Bond, project-based Section 8, HOME, Rural Development, AHP, and other affordable housing programs, and is willing to provide services to Dillon Station based on this background, and that to Dillon Station desires to have such services provided by Lumina Compliance.

The accessibility consulting services shall include the following:

1. Construction Document Services

a. Conduct one (1) review of the construction documents, architectural drawings and specifications to identify noncompliance as applicable with the following applicable codes, standards, and regulations:
   i. Section 504 of the Rehabilitation Act of 1973 – Uniform Federal Accessibility Standards (UFAS),
   ii. Title II of the Americans with Disabilities Act,
   iii. Fair Housing Accessibility Guidelines,
   iv. 2010 ADA Standards for Accessible Design,
   v. ICC/ANSI A117.1 (2009 Edition),
   vi. All applicable State and Local guideline

b. The intent of the review and analysis is to provide information regarding proposed construction improvements as they relate to accessibility compliance, including site access, common area spaces and dwelling units. The objectives should concentrate on:
   i. Identifying the overall scope of construction work.
   ii. Reviewing the completeness and adequacy of the construction documents for accessibility.
   iii. Reviewing and verifying the adequacy of accessibility compliance items.

c. Prepare drawing markups, detail sketches, and a written report with findings and recommendations for corrective action to be delivered to the Architect and Owner. The full report will be provided within 10 business days following receipt of the construction documents.

d. Provide a back-check review of construction documents following revisions, if required, and prior to construction start. This review and report will be provided within 10 business days following receipt of updated drawings. Lumina Compliance will provide a separate Letter of Clearance.

2. Construction Phased Services

a) Provide/conduct construction progress monitoring to ensure that the proposed construction, as it relates to accessibility, is progressing as indicated in the construction documents.

b) Provide a critical sequence of inspections to review and observe conditions with respect to accessibility. Consultant shall identify inspection milestones to be incorporated into the Project Schedule by the General Contractor and coordinated with the Consultant during the progress of work.

c) Inspection milestones to be identified by the Accessibility Consultant to ensure that the proposed construction, as is relates to accessibility, is progressing as indicated in the construction documents.

Lumina Compliance
1515 Mockingbird Lane | Charlotte, North Carolina 28207 | 704.343.5779

i) First Visit - An inspection of the construction site after framing is completed to determine that the property is following the approved plans and specifications as to accessibility.
   (1) After Framing is completed and electrical/plumbing is installed.

ii) Second Visit - after kitchen and bathroom cabinets have been installed.

iii) Third Visit – occurs two week prior to the final close out of the entire property.
   Accessible units should be ready for move-in and pavement work completed, when new ramps, flatwork is completed for final inspection. For example
   (1) Exterior accessible route from the public right-of-way
   (2) Exterior parking area and path of travel to the entrances of the facility
   (3) Designated accessible route to exterior/common area amenities.

iv) When, after the 3rd site visit, minor items are still found to be noncompliant, photographs of those items should be taken and emailed to the inspector. The inspector will review the photos to ensure that all items have been satisfactorily corrected. Upon confirmation, a Final Approval Letter will be emailed to the company, indicating that the items raised in the reports have been property addressed. If there are too many items found in noncompliance after the 3rd site visit, and/or a photo review will not accurately show that all items are in compliance, then a 4th site visit might be necessary.

b) Provide on-site feedback for immediate correction and a site visit report for each site visit within 5 business days those details observations including photos, noted deficiencies, detailed recommendations for corrections, and a requested date for follow-up to inspect corrections.
c) Following the final report after the general contractor and/or developer has had a reasonable opportunity to correct deficiencies; the Qualified Consultant will confirm that the corrections were executed properly.
d) Reporting: The consultant must sign Exhibit EE SC Housing Consultant Accessibility Certification and return to the SC Housing Tax Credit Manager at Placed in Service.

Lumina Compliance
1515 Mockingbird Lane | Charlotte, North Carolina 28207 | 704.343.5779

Site Accessibility Evaluation

Sycamore Station
7156 Barrington Dr
Oak Forest, NC 28215
Accessibility Evaluation
Inspection Date: 05/28/2024
Inspectors: Clark Crowther, Greg Proctor

Prepared By
Lumina Compliance
(704) 343 - 5779
www.luminacomp.com

Report Date: 05/29/2024

New Construction

Powered by BlueDAG

Lumina Compliance

05/29/2024

Dear Greg,

Thank you for the opportunity to be of service to you by performing an accessibility evaluation for the Sycamore Station located at 7156 Barrington Dr, Oak Forest, NC 28215. The property was inspected on 05/28/2024. We recommended that all barriers that are identified in this evaluation that are readily achievable, be removed as soon as possible with other barriers being removed as they become readily achievable. A barrier removal plan should be developed to assist in planning the removal of all barriers that are not currently "readily achievable" to remove. Periodic maintenance to ensure continued accessibility is essential in providing a safe and usable environment. Parking lot markings, signage, door opening pressures, and maintaining clear floor space at doors and other elements and fixtures, available to the public, must be part of an ongoing maintenance schedule. If you have any questions regarding this report or would like to schedule a meeting with your architect, attorney, or contractor, and me, please feel free to contact me. Additional services are available such as on construction monitoring, plan review, ownership representation and verification of completed work prior to owner acceptance.

Sincerely,

Clark Crowther

Clark Crowther

Powered by BlueDAG

Table of Contents

Findings 4

Community Space 4

Community Bathroom - Toilet 18" From The Wall 4

Trash and Dumpster Areas 5

Trash / Dumpster Area - 60" of Clear Turning Radius 5

Dwelling Units 6

Bathroom - Tub / Shower Seat 6

Estimated Time-Line for Barrier Removal 7

Community Space: Community Bathroom - Toilet 18" From The Wall

Finding: 1

Center line of toilet in the men's room is located less than 18" from side wall.

1984 UFAS Section 4.16.2
Clear floor space for water closets not in stalls shall comply with Fig. 28. Clear floor space may be arranged to allow either a left-handed or right-handed approach.

Citation:

1984 UFAS Section: 4.16.2

Budgeting Range:

$100 - $2,000.00

Recommendation:

Move toilets or install offset flange so that they are at least 18" from side wall.

Barrier Priority:

Required (6): Required

Estimated Remediation Date:

06/01/2025

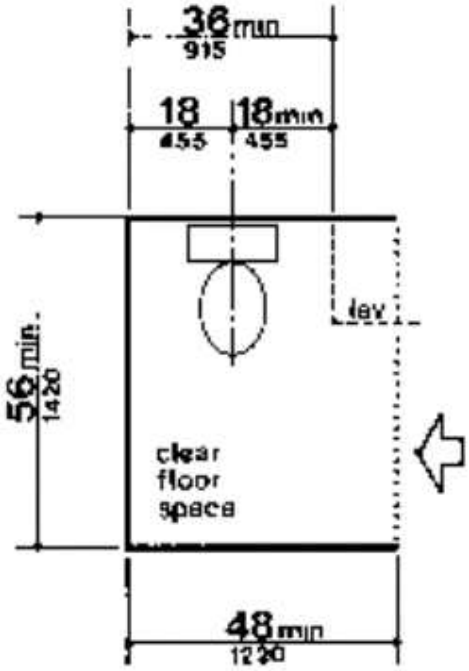

Trash and Dumpster Areas: Trash / Dumpster Area - 60" of Clear Turning Radius

Finding: 2

Compliant turning space has not been provided.

The space required for a wheelchair to make a 180-degree turn is a clear space of 60 inches in diameter or a T-shaped space.

1984 UFAS Section 4.2.3
The space required for a wheelchair to make a 180-degree turn is a clear space of 60 in (1525 mm) diameter (see Fig. 3(a)) or a T-shaped space (see Fig. 3(b)).

Citation:

1984 UFAS Section: 4.2.3

Budgeting Range:

$1,500 - $3,000.00

Recommendation:

Create 60 inches of clear level turning radius at the trash dumpster

Barrier Priority:

Required (6): Required

Estimated Remediation Date:

06/01/2025

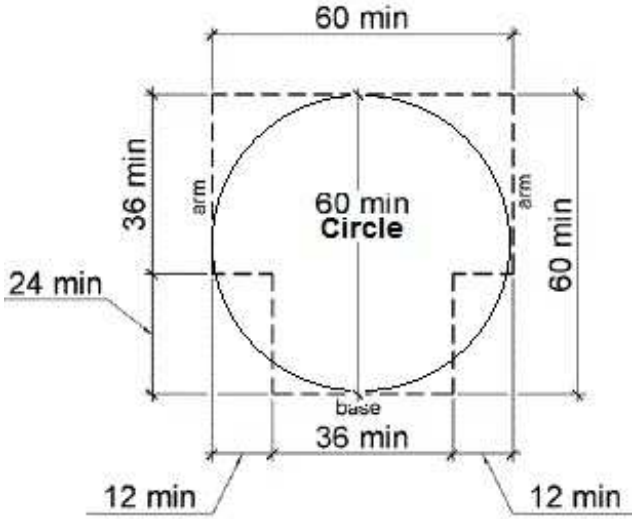

Dwelling Units: Bathroom - Tub / Shower Seat

Finding: 3

There is no tub seat provided in shower/tub stall.

1984 UFAS Section 4.20.3
An in-tub seat or a seat at the head end of the tub shall be provided as shown in Fig. 33 and 34. The structural strength of seats and their attachments shall comply with 4.26.3. Seats shall be mounted securely and shall not slip during use.

Citation:

1984 UFAS Section: 4.20.3

Budgeting Range:

$150 - $250.00

Recommendation:

Provide a tub seat in accessible units or make them available.

Barrier Priority:

Required (6): Required

Estimated Remediation Date:

06/01/2025

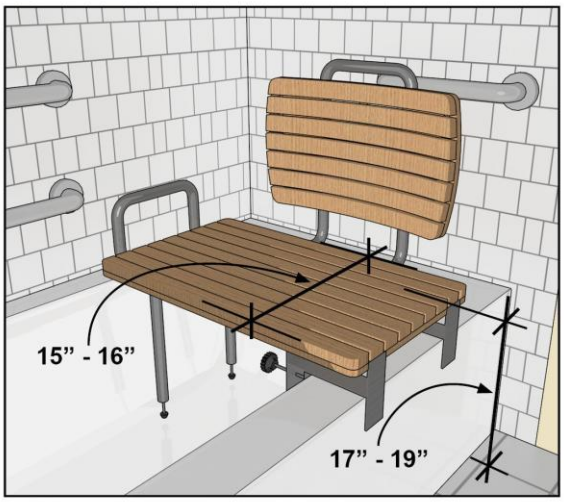

Estimated Time-Line for Finding Removal

(Please complete and return page/s to be inserted in report)

Community Space: Community Bathroom - Toilet 18" From The Wall		**Est. Remediation Date**
Finding 1	**Center line of toilet in the men's room is located less than**	**06/01/2025**
Trash and Dumpster Areas: Trash / Dumpster Area - 60" of Clear Turning Radius		**Est. Remediation Date**
Finding 2	**Compliant turning space has not been provided. The space**	**06/01/2025**
Dwelling Units: Bathroom - Tub / Shower Seat		**Est. Remediation Date**
Finding 3	**There is no tub seat provided in shower/tub**	**06/01/2025**

Completed By:

Print Name: _____ *Title:* _____

Phone: _____ *Date:* _____

Please Mail to:
Lumina Compliance
1515 Mockingbird Lane
Charlotte, NC 28209

Site Accessibility Evaluation

Dallas Manor
350 Paulding Lane
Dallas, GA 30312

Inspection Date: 05/25/2023
Inspectors: Clark Crowther

Prepared By
Lumina Compliance
(704) 572 - 0199

Report Date: 05/26/2023

Rehabilitation

Table of Contents

Findings 3

slope 3

Management Office - Rent Drop Box 3

Area descriptions with no section 4

Management Office - Accessible Route 4

Community Kitchen - 50% 0f Freezer Below 54" 5

Unit Parking 7

Common Questions: Readily Achievable Barrier Removal 9

Estimated Time-Line for Barrier Removal 17

slope: Management Office - Rent Drop Box

Finding: 1

The rent drop box is positioned too high for either a side or front approach.

Where a clear floor or ground space allows a parallel approach to an element and the side reach is unobstructed, the high side reach shall be 48 inches maximum and the low side reach shall be 15 inches minimum above the finish floor or ground.

Where a forward reach is unobstructed, the high forward reach shall be 48 inches maximum and the low forward reach shall be 15 inches minimum above the finish floor or ground.

2010 ADAS Section 308.1
Reach ranges shall comply with 308.

Citation:

2010 ADAS Section: 308.1

Budgeting Range:

$25 - $150.00

Recommendation:

Lower the rent drop box to 48 inches from the finished floor

Barrier Priority:

6 (Required): Required

Estimated Remediation Date:

11/01/2023

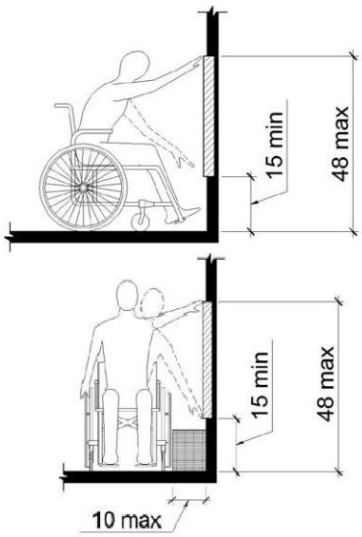

Management Office - Accessible Route

Finding: 2

Accessible entrance/s signage missing.

Directional signage pointing to the accessible entrance is required. If an accessible entrance is not available and is not "readily achievable" to provide, signage is recommended indicating that curb side service is available upon request or that services may be provided at a different accessible location. It is recommended that this sign have a working phone number that is always answered during regular business hours. Another option for consideration would be the installation of a door bell at an accessible location on the exterior of the business that will alert an attendant.

2010 ADAS Section 216.6
Where not all entrances comply with 404, entrances complying with 404 shall be identified by the International Symbol of Accessibility complying with 703.7.2.1. Directional signs complying with 703.5 that indicate the location of the nearest entrance complying with 404 shall be provided at entrances that do not comply with 404.

Citation:

2010 ADAS Section: 216.6

Budgeting Range:

$50 - $250.00

Recommendation:

Add directional signage to the accessible entrance to the management office. The accessible entrance is located on the other side of the building from the non-accessible entrance.

Barrier Priority:

6 (Required): Required

Estimated Remediation Date:

11/01/2023

Community Kitchen - 50% 0f Freezer Below 54"

Finding: 3

Less than 50 percent of the freezer space is below 54 inches off the finished floor or ground.

Combination refrigerators and freezers shall have at least 50 percent of the freezer space 54 inches maximum above the finish floor or ground. The clear floor or ground space shall be positioned for a parallel approach to the space dedicated to a refrigerator/freezer with the centerline of the clear floor or ground space offset 24 inches maximum from the centerline of the dedicated space.

2010 ADAS Section 804.6.6
Combination refrigerators and freezers shall have at least 50 percent of the freezer space 54 inches (1370 mm) maximum above the finish floor or ground. The clear floor or ground space shall be positioned for a parallel approach to the space dedicated to a refrigerator/ freezer with the centerline of the clear floor or ground space offset 24 inches (610 mm) maximum from the centerline of the dedicated space.

Citation:

2010 ADAS Section: 804.6.6

Budgeting Range:

$1,000 - $2,500.00

Recommendation:

Install a refrigerator that has 50% of the freezer space below 54 inches from the finished floor or install a side by side or a bottom freezer model.

Barrier Priority:

5 (Recommended): Should be completed but not necessarily required. (Includes findings and or elements that may have been in compliance with previous editions of the codes and standards but have since changed. Generally, these items are easily modified to provide the greatest degree of access as well as compliance with the most current codes and standards)

Estimated Remediation Date:

11/01/2023

Finding #3 Continued

Unit Parking

Finding: 4

The running slope (long dimension) of the accessible parking stall behind the building exceeds 2%.

The running slope in an accessible parking stall and the access aisle must not exceed 2%.

2010 ADAS Section 502.4
Parking spaces and access aisles serving them shall comply with 302. Access aisles shall be at the same level as the parking spaces they serve. Changes in level are not permitted.

1984 UFAS Section 4.6.3
Parking spaces for disabled people shall be at least 96 in (2440 mm) wide and shall have an adjacent access aisle 60 in (1525 mm) wide minimum (see Fig. 9). Parking access aisles shall be part of an accessible route to the building or facility entrance and shall comply with 4.3. Two accessible parking spaces may share a common access aisle. Parked vehicle overhangs shall not reduce the clear width of an accessible circulation route. Parking spaces and access aisles shall be level with surface slopes not exceeding 1:50 in all directions.

Citation:

2010 ADAS Section: 502.4

1984 UFAS Section: 4.6.3

Budgeting Range:

$500 - $4,500.00

Recommendation:

Reduce the running slope of the accessible parking space to less than 2%.

Barrier Priority:

5 (Recommended): Should be completed but not necessarily required. (Includes findings and or elements that may have been in compliance with previous editions of the codes and standards but have since changed. Generally, these items are easily modified to provide the greatest degree of access as well as compliance with the most current codes and standards)

Estimated Remediation Date:

11/01/2023

Finding #4 Continued

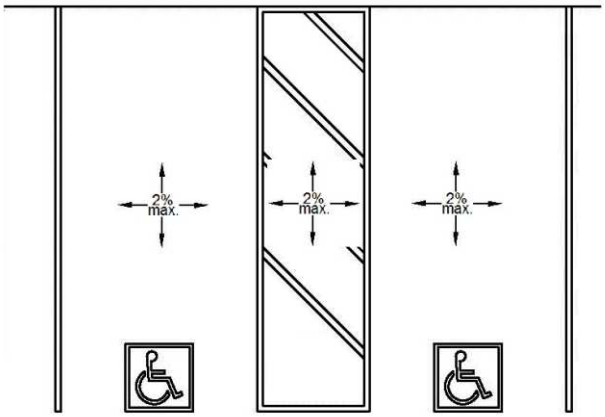

Common Questions: Readily Achievable Barrier Removal

The ADA requires companies providing goods and services to the public to take certain limited steps to improve access to existing places of business. This mandate includes the obligation to remove barriers from existing buildings when it is readily achievable to do so. Readily achievable means easily accomplishable and able to be carried out without much difficulty or expense.

Many building features that are common in older facilities such as narrow doors, a step or a round door knob at an entrance door, or a crowded check-out or store aisle are barriers to access by people with disabilities. Removing barriers by ramping a curb, widening an entrance door, installing visual alarms, or designating an accessible parking space is often essential to ensure equal opportunity for people with disabilities. Because removing these and other common barriers can be simple and inexpensive in some cases and difficult and costly in others, the regulations for the ADA provide a flexible approach to compliance. This practical approach requires that barriers be removed in existing facilities only when it is readily achievable to do so. The ADA does not require existing buildings to meet the ADA's standards for newly constructed facilities.

The ADA states that individuals with disabilities may not be denied the full and equal enjoyment of the "goods, services, facilities, privileges, advantages, or accommodations" that the business provides -- in other words, whatever type of good or service a business provides to its customers or clients. A business or other private entity that serves the public must ensure equal opportunity for people with disabilities. In the following section, the US Department of Justice answers some of the most commonly asked questions about the barrier removal requirement and how it differs from those requirements that apply to new construction and alteration of buildings.

I own three buildings, two of which were designed and constructed prior to the enactment of the ADA. I have been told I have to make them all accessible. Is this true? Does the ADA require me to make them all accessible?

The ADA establishes different requirements for existing facilities and new construction. In existing facilities where retrofitting may be expensive, the requirement to provide access through barrier removal is less than it is in new construction where accessibility can be incorporated in the initial stages of design and construction without a significant increase in cost. The requirement to remove barriers in existing buildings applies only to a private entity that owns, leases, leases to or operates a "place of public accommodation." Further, barriers must be removed only where it is "readily achievable" to do so. Readily achievable means easily accomplishable and able to be carried out without much difficulty or expense.

Common Questions: Readily Achievable Barrier Removal

Is my business required to remove barriers?

If your business provides goods and services to the public, you are required to remove barriers if doing so is readily achievable. Such a business is called a public accommodation because it serves the public. If your business is not open to the public but is only a place of employment like a warehouse, manufacturing facility or office building, then there is no requirement to remove barriers. Such a facility is called a commercial facility. While the operator of a commercial facility is not required to remove barriers, you must comply with the ADA Standards for Accessible Design when you alter, renovate or expand your facility.

What is a "place of public accommodation"?

A place of public accommodation is a facility whose operations affect commerce and fall within at least one of the following 12 categories set out in the ADA:

1. *Places of lodging (e.g., inns, hotels, motels) (except for owner occupied establishments renting fewer than six rooms);*
2. *Establishments serving food or drink (e.g., restaurants and bars);*
3. *Places of exhibition or entertainment (e.g., motion picture houses, theaters, concert halls, stadiums);*
4. *Places of public gathering (e.g., auditoriums, convention centers, lecture halls);*
5. *Sales or rental establishments (e.g., bakeries, grocery stores, hardware stores, shopping centers);*
6. *Service establishments (e.g., Laundromats, dry-cleaners, banks, barber shops, beauty shops, travel services, shoe repair services, funeral parlors, gas stations, offices of accountants or lawyers, pharmacies, insurance offices, professional offices of health care providers, hospitals);*
7. *Public transportation terminals, depots, or stations (not including facilities relating to air transportation);*
8. *Places of public display or collection (e.g., museums, libraries, galleries);*
9. *Places of recreation (e.g., parks, zoos, amusement parks);*
10. *Places of education (e.g., nursery schools, elementary, secondary, undergraduate, or postgraduate private schools);*
11. *Social service center establishments (e.g., day care centers, senior citizen centers, homeless shelters, food banks, adoption agencies); and*
12. *Places of exercise or recreation (e.g., gymnasiums, health spas, bowling alleys, golf courses).*

Common Questions: Readily Achievable Barrier Removal

I operate a restaurant that opened in 1991. The city required that the restaurant comply with the local accessibility code. Is the restaurant "grandfathered" and not required to remove barriers as required by the ADA?

No. A restaurant is a public accommodation and a place of public accommodation must remove barriers when it is readily achievable to do so. Although the facility may be "grandfathered" according to the local building code, the ADA does not have a provision to "grandfather" a facility. While a local building authority may not require any modifications to bring a building "up to code" until a renovation or major alteration is done, the ADA requires that a place of public accommodation remove barriers that are readily achievable even when no alterations or renovations are planned.

Do I, as the owner, have to pay for removing barriers?

Yes, but tenants and management companies also have an obligation. Any private entity who owns, leases, leases to, or operates a place of public accommodation shares in the obligation to remove barriers.

If I do remove barriers, is my business entitled to any tax benefit to help pay for the cost of compliance?

As amended in 1990, the Internal Revenue Code allows a deduction of up to $15,000 per year for expenses associated with the removal of qualified architectural and transportation barriers (Section 190). The 1990 amendment also permits eligible small businesses to receive a tax credit (Section 44) for certain costs of compliance with the ADA. An eligible small business is one whose gross receipts do not exceed $1,000,000 or whose workforce does not consist of more than 30 full-time workers. Qualifying businesses may claim a credit of up to 50 percent of eligible access expenditures that exceed $250 but do not exceed $10,250. Examples of eligible access expenditures include the necessary and reasonable costs of removing architectural, physical, communications, and transportation barriers; providing readers, interpreters, and other auxiliary aids; and acquiring or modifying equipment or devices.

Common Questions: Readily Achievable Barrier Removal

How do I determine what is readily achievable?

"Readily achievable" means easily accomplishable and able to be carried out without much difficulty or expense. Determining if barrier removal is readily achievable is, by necessity, a case-by-case judgment. Factors to consider include:

1. *The nature and cost of the action;*
2. *The overall financial resources of the site or sites involved; the number of persons employed at the site; the effect on expenses and resources; legitimate safety requirements necessary for safe operation, including crime prevention measures; or any other impact of the action on the operation of the site;*
3. *The geographic separateness, and the administrative or fiscal relationship of the site or sites in question to any parent corporation or entity;*

   4) If applicable, the overall financial resources of any parent corporation or entity; the overall size of the parent corporation or entity with respect to the number of its employees; the number, type, and location of its facilities; and

   5) If applicable, the type of operation or operations of any parent corporation or entity, including the composition, structure, and functions of the workforce of the parent corporation or entity. If the public accommodation is a facility that is owned or operated by a parent entity that conducts operations at many different sites, you must consider the resources of both the local facility and the parent entity to determine if removal of a particular barrier is "readily achievable." The administrative and fiscal relationship between the local facility and the parent entity must also be considered in evaluating what resources are available for any particular act of barrier removal.

Can you tell me what barriers it will be "readily achievable" to remove?

The Department's regulation contains a list of 21 examples of modifications that may be readily achievable. These include installing ramps, making curb cuts in sidewalks and at entrances, repositioning telephones, adding raised markings on elevator control buttons, installing visual alarms, widening doors, installing offset hinges to widen doorways, insulating lavatory pipes under sinks, repositioning a paper towel dispenser, installing a full-length mirror, rearranging toilet partitions to increase maneuvering space or installing an accessible toilet stall. The list is not exhaustive and is only intended to be illustrative. Each of these modifications will be readily achievable in many instances, but not in all. Whether or not any of these measures is readily achievable will have to be determined on a case-by-case basis in light of the nature and cost of the barrier removal and the resources available.

Common Questions: Readily Achievable Barrier Removal

Does the ADA permit me to consider the effect of a modification on the operation on my business?

Yes. The ADA permits consideration of factors other than the initial cost of the physical removal of a barrier.

ILLUSTRATION: CDE convenience store determines that it would be inexpensive to remove shelves to provide access to wheelchair users throughout the store. However, this change would result in a significant loss of selling space that would have an adverse effect on its business. In this case, the removal of all the shelves is not readily achievable and, thus, is not required by the ADA. However, it may be readily achievable to remove some shelves.

If an area of my store is reachable only by a flight of steps, would I be required to add an elevator?

Usually no. A public accommodation generally would not be required to remove a barrier to physical access posed by a flight of steps, if removal would require extensive ramping or an elevator. The readily achievable standard does not require barrier removal that requires burdensome expense. Thus, where it is not readily achievable to do so, the ADA would not require a public accommodation to provide access to an area reachable only by a flight of stairs.

I have a portable ramp that we use for deliveries - can't I just use that?

Yes, you could, but only if the installation of a permanent ramp is not readily achievable. In order to promote safety, a portable ramp should have railings, a firm, stable, nonslip surface and the slope should not exceed one to twelve (one unit of rise for every twelve units horizontal distance). It should also be properly secured and staff should be trained in its safe use.

Common Questions: Readily Achievable Barrier Removal

Because one of my buildings is very inaccessible, I don't know what to fix first. Is guidance available?

Yes. The Department recommends priorities for removing barriers in existing facilities because you may not have sufficient resources to remove all existing barriers at one time. These priorities are not mandatory. You are free to exercise discretion in determining the most effective "mix" of barrier removal measures for your facilities. The ***first priority*** *is enabling individuals with disabilities to enter the facility. This priority on "getting through the door" recognizes that providing physical access to a facility from public sidewalks, public transportation, or parking is generally preferable to any alternative arrangements in terms of both business efficiency and the dignity of individuals with disabilities. The* ***second priority*** *is providing access to those areas where goods and services are made available to the public. For example, in a hardware store these areas would include the front desk and the retail display areas of the store. The* ***third priority*** *is providing access to restrooms (if restrooms are provided for use by customers or clients). The* ***fourth priority*** *is removing any remaining barriers, for example, lowering telephones.*

What about my employee areas? Must I remove barriers in areas used only by employees?

No. The "readily achievable" obligation to remove barriers in existing facilities does not extend to areas of a facility that are used exclusively by employees. Of course, it may be necessary to remove barriers in response to a request for "reasonable accommodation" by a qualified employee or applicant as required by Title I of the ADA. For more information, contact the Equal Employment Opportunity Commission (EEOC) which enforces Title I of the ADA.

How can a public accommodation decide what needs to be done?

One effective approach is to conduct a "self-evaluation" of the facility to identify existing barriers. While not required by the ADA, a serious effort at self-assessment and consultation can save resources by identifying the most efficient means of providing required access and can diminish the threat of litigation. It serves as evidence of a good faith effort to comply with the barrier removal requirements of the ADA. This process should include consultation with individuals with disabilities or with organizations representing them and procedures for annual reevaluations.

Common Questions: Readily Achievable Barrier Removal

If a public accommodation determines that its facilities have barriers that should be removed, but it is not readily achievable to undertake all of the modifications now, what should it do?

The Department recommends that a public accommodation develop an implementation plan designed to achieve compliance with the ADA's barrier removal requirements. Such a plan, if appropriately designed and executed, could serve as evidence of a good faith effort to comply with the ADA's barrier removal requirements.

What if I'm not able to remove barriers at this time due to my financial situation? Does that mean I'm relieved of current responsibilities?

No, when you can demonstrate that the removal of barriers is not readily achievable, you must make your goods and services available through alternative methods, if undertaking such methods is readily achievable. Examples of alternative methods include having clerks retrieve merchandise located on inaccessible shelves or delivering goods or services to the customers at curbside or in their homes. Of course, the obligation to remove barriers when readily achievable is a continuing one. Over time, barrier removal that initially was not readily achievable may later become so because of your changed circumstances.

If the obligation is continuing, do you mean there are no limits on what I must do to remove barriers?

No. There are limits. In removing barriers, a public accommodation does not have to exceed the level of access required under the alterations provisions contained in the Standards (or the new construction provision where the Standards do not provide specific provisions for alterations).

ILLUSTRATION 1: An office building that houses places of public accommodation is removing barriers in public areas. The alterations provisions of the Standards explicitly state that areas of rescue assistance are not required in buildings that are being altered. Because barrier removal is not required to exceed the alterations standard, the building owner need not establish areas of rescue assistance.

ILLUSTRATION 2: A grocery store has more than 5000 square feet of selling space and prior to the ADA had six inaccessible check-out aisles. Because the Standards do not contain specific provisions applicable to the alteration of check-out aisles one must look to the new construction provisions of the Standards for the upper limit of the barrier removal obligation. These provisions require only two of the six check-out aisles to be accessible. Because the store found it readily achievable in 1993 and 1994 to remove barriers and make two of check-out aisles accessible, the store has fulfilled its obligation and is not required to make more checkout aisles accessible.

Common Questions: Readily Achievable Barrier Removal

What is the difference between barrier removal and alterations? Aren't they both very similar?

Not really. Under the ADA, barrier removal is done by a place of public accommodation to remove specific barriers that limit or prevent people with disabilities from obtaining access to the goods and services offered to the public. This is an ongoing obligation for the business that has limits determined by resources, size of the company and other factors. An alteration is replacement, renovation or addition to an element or space of a facility. Generally alterations are done to improve the function of the business, to accommodate a change or growth in services, or as part of a general renovation. The requirements for alterations are greater than those for barrier removal because the alteration is part of a larger construction or replacement effort.

One of the buildings that I own is a small factory with offices. Do I have to make that accessible?

No, commercial facilities such as factories, warehouses, and office buildings that do not contain places of public accommodation are considered "commercial facilities" and are not required to remove barriers in existing facilities. They are, however, covered by the ADA's requirements for accessible design in new construction or alterations.

Estimated Time-Line for Barrier Removal

(Please complete and return page/s to be inserted in report)

slope: Management Office - Rent Drop Box		**Est. Remediation Date**
Finding: 1	**The rent drop box is positioned too high for either a side or**	**11/01/2023**
Management Office - Accessible Route		**Est. Remediation Date**
Finding: 2	**Accessible entrance/s signage missing. Directional signage**	**11/01/2023**
Community Kitchen - 50% 0f Freezer Below 54"		**Est. Remediation Date**
Finding: 3	**Less than 50 percent of the freezer space is below 54 inches off**	**11/01/2023**
Unit Parking		**Est. Remediation Date**
Finding: 4	**The running slope (long dimension) of the accessible parking**	**11/01/2023**

Completed By:

Print Name: _____ *Title:* _____

Phone: _____ *Date:* _____

Please Mail to:
Lumina Compliance
1515 Mockingbird Lane
Charlotte, NC 28209